Rev	Date	Content	Draw By
0	2016/04/01	Release	Vargas

CTB-32220

SPECIFICATION			
1. SENSOR SIZE		1/3.2 "-OV5658	
2. MAX IMAGE CIRCLE		ϕ2.8	
3. EFL		0.76	Including 0.3mm IR 0.5mm CG
4-1. OPTICAL BFL (BFL)		2±0.2	
5-1. MECHANICAL BFL (MBFL)		1.5±0.2	
6. F/NO		2.1	
4-2. OPTICAL BFL(AIR)		1.9±0.2	
5-2. MECHANICAL BFL(AIR)		1.4±0.2	
7. VIEW OF FIELD	VERTICAL	222° (Y=1.71 mm)	
	HORIZONTAL	222° (Y=2.3 mm)	
	DIAGONAL	222° (Y=2.86 mm)	
8. OPTICAL DISTORTION		<-97.2%	
9. RELATIVE ILLUMINATION		>50%	
10. CONSTRUCTION		2G4P+1 IR	
11. CUT FREQUENCY AT 50%		Tabs>90% at 420~630nm T=50% at 650±10nm T<5% at 680~1100nm	
12. THREAD		M12xP0.5	
13. CHIEF RAY ANGLE		<11.4°	

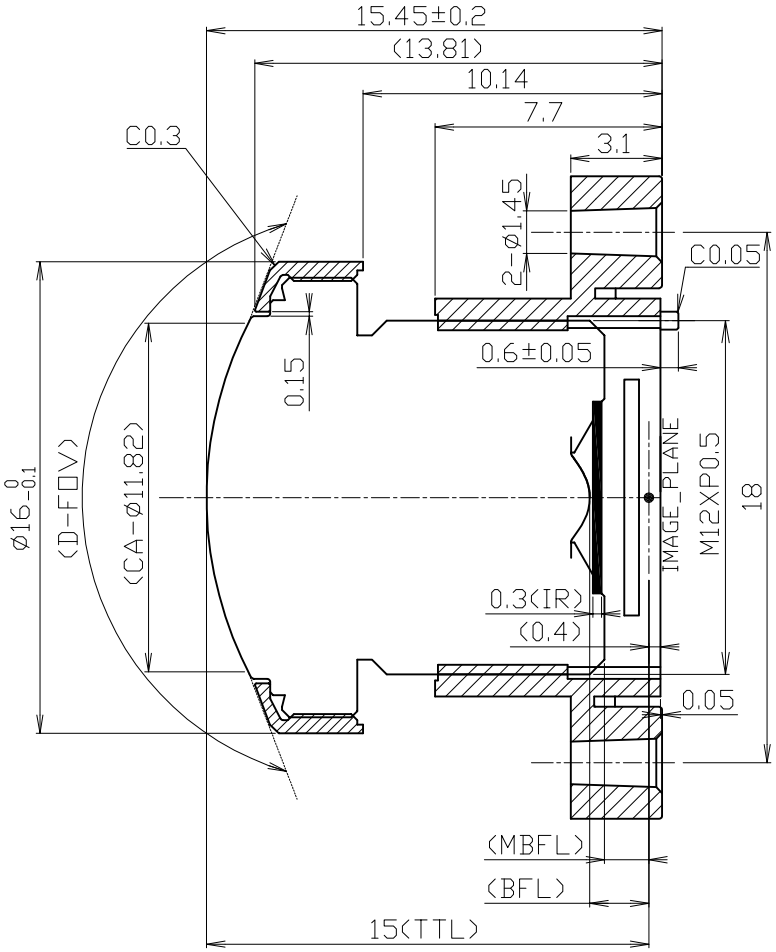

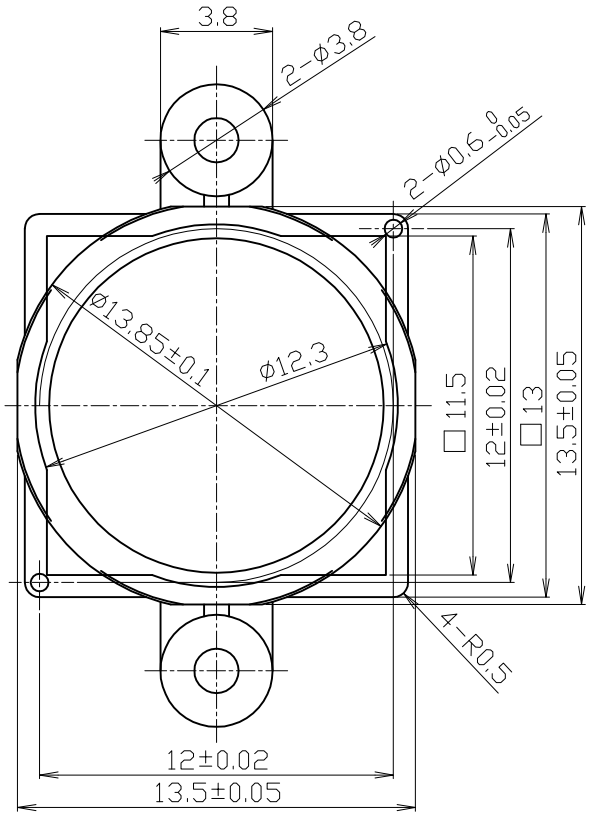

PART NAME: 式樣（鏡頭模組）	MATERIAL		X.± 0.1	X.± 0.5°
			.X ± 0.05	.X ± 0.1°
PART NO:	TREATMENT		.XX ± 0.01	.XX ± 0.05°
	SCALE	4:1	Third Angle	SHEET 1/1
QUANTITY:	UNITS	mm		A4 SIZE